ATEMPOWER

BATTERY BOX AP-VABB-007A

USER MANUAL

ABOUT US

ATEM POWER, born in June, 2017, as a synonym for exciting outdoor experience, is an Australian company with dedication and passion for the R&D of high quality products in the field of renewable energy products, batteries and related accessories.

Since the company was founded, we have committed to innovation that aims to make your life infinitely more convenient. And the belief in our conviction for quality and commitment allows us to innovate in developing products that are optimally tailored to the needs of our amazing customers.

We engineer and supply solar products for homes, 4x4s, recreational vehicles and virtually any application you can think of. And we also develop reliable, high performing deep-cycled batteries and lithium batteries for standby or daily power needs. Accessories include battery chargers and inverters that are ideal for RV's, commercial vehicles, boats, yachts and many more applications!

At ATEM POWER, we stay true to our DNA by prioritizing technological innovation designed to improve our products and striving to provide excellent customer care. Because we are motivated to explore the limits of solar power!

WARNINGS & SAFETY INFORMATION

- Before installing a battery in the battery box, ensure that you have read through all relevant product and safety information for that battery.
- Do not strike, throw the battery box.
- Never connect positive (red) and negative (black) terminals of the battery box together. This will cause the battery to short and create a fire hazard.
- Do not insert foreign objects into the ports of the battery box as this may lead to electric shock.
- Do not allow metal objects to fall into the battery box. This could cause a short circuit, and poses a risk to the user.
- Do not submerge the battery box in liquids.
- Please note that the battery is not included in this purchase.
- While working on the battery box please wear protective eyeglasses and clothing. Please wear insulating gloves and provide necessary protection. Do not wear any metallic items such as watches, bracelets, etc.
- Do not attach a battery to the battery box if it or your hands are currently exposed to moisture or rain.
- Only use this product at temperature -20°C ~ +60°C (-4°F ~ +140°F).
- When charging, adequate ventilation must be provided to dissipate heat and battery gases. Keep clear of naked flames, sparks or conductive material while charging a battery.
- Do not attempt to disassemble the battery box as this may result in electric shock, fire or explosion. Any attempt to disassemble, perform unapproved repairs or make modifications to the battery box will void the warranty.
- Always use safe lifting techniques when lifting and installing the battery box.
- When using the handle to move the battery box, make sure the buckle is latched.
- The battery box is not intended to be installed or operated by people (including children) with reduced physical or mental capabilities, or those who are under the influence of drugs or alcohol.
- Make sure that you attach the correct wires to the appropriate terminals of your battery; incorrect installation could result in damage to the unit or voiding of the warranty.
- Make sure wires from an externally connected device are tightened fully when connected to the battery box terminals. A loose connection will increase electrical resistance and generate heat, and it may even melt the battery box case.
- This battery box is only suitable for batteries with dimensions up to 8.19"L (20.8cm) x 5.28"W (13.4cm) x 7.72"H (19.6cm).

DIMENSION:

External Dimensions: 9.45"L (24cm) x 7.20"W (18.3cm) x 11.06"H (28.1cm)

Internal Dimensions: 8.19"L (20.8cm) x 5.28"W (13.4cm) x 7.72"H (19.6cm)

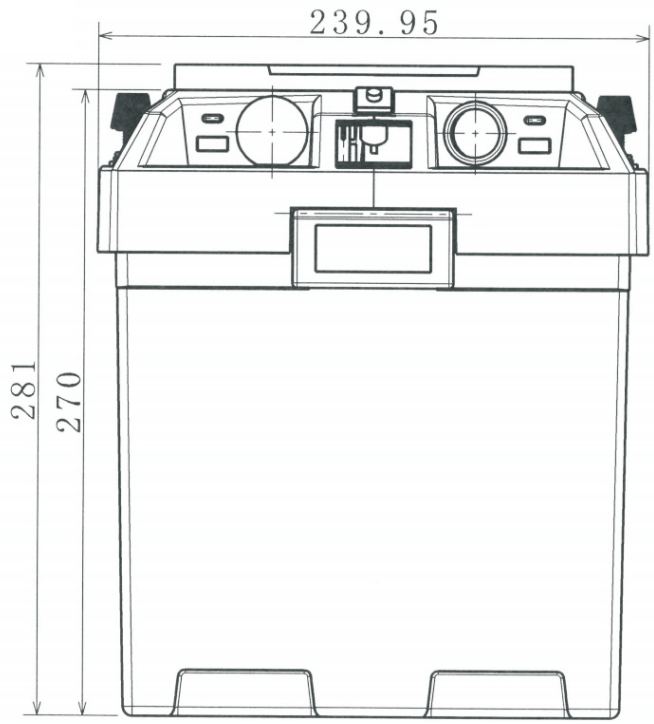

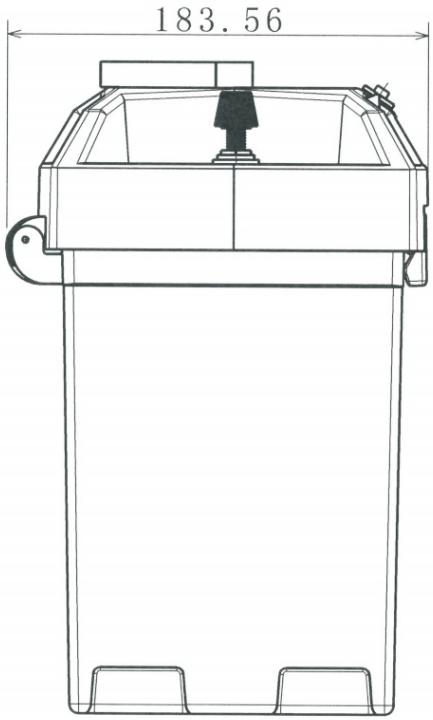

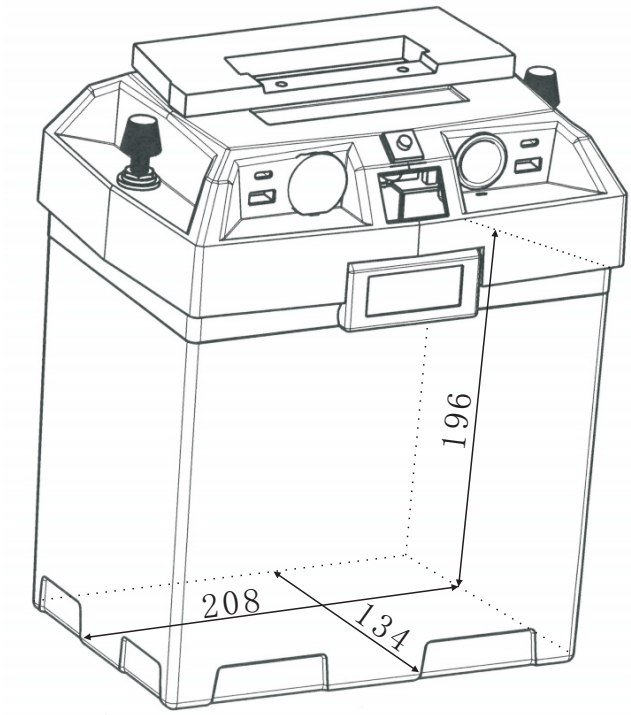

measured in millimeter(mm)

ASSEMBLY DRAWING:

1.Positive and Negative Terminals	2.ON/OFF Switch
3.Volt Meter	4.Cigarette Lighter Socket Output （12V, 10A）
5.USB Type-A & Type-C Ports	Max 30W, Fast Charging Protocols Supported
General: QC2.0: 5V/3.6A; 9V/2.5A; 12V/2A; QC3.0: 3.6~12V, 2.6A MAX; PD2.0: 5V/3A; 9V/3A; 12V/2.25A; PD3.0 (PPS): 3.3~11V/3A (PPS: 20mV/step) BC1.2: 5V/3.2A; MTK PE+1.1: 5/7/9/12V, 3A MAX; MTK PE+2.0: 5~20V (0.5V/step), 3A MAX	Brand-Specific: APPLE 2.1A; APPLE 2.4A; AFC (Samsung); FCP (Huawei); SCP (Huawei); VOOC (OPPO); Super VOOC (OPPO); SFCP (Spreadtrum)
6.Anderson Plug Output/Input （50A）	7.Buckle

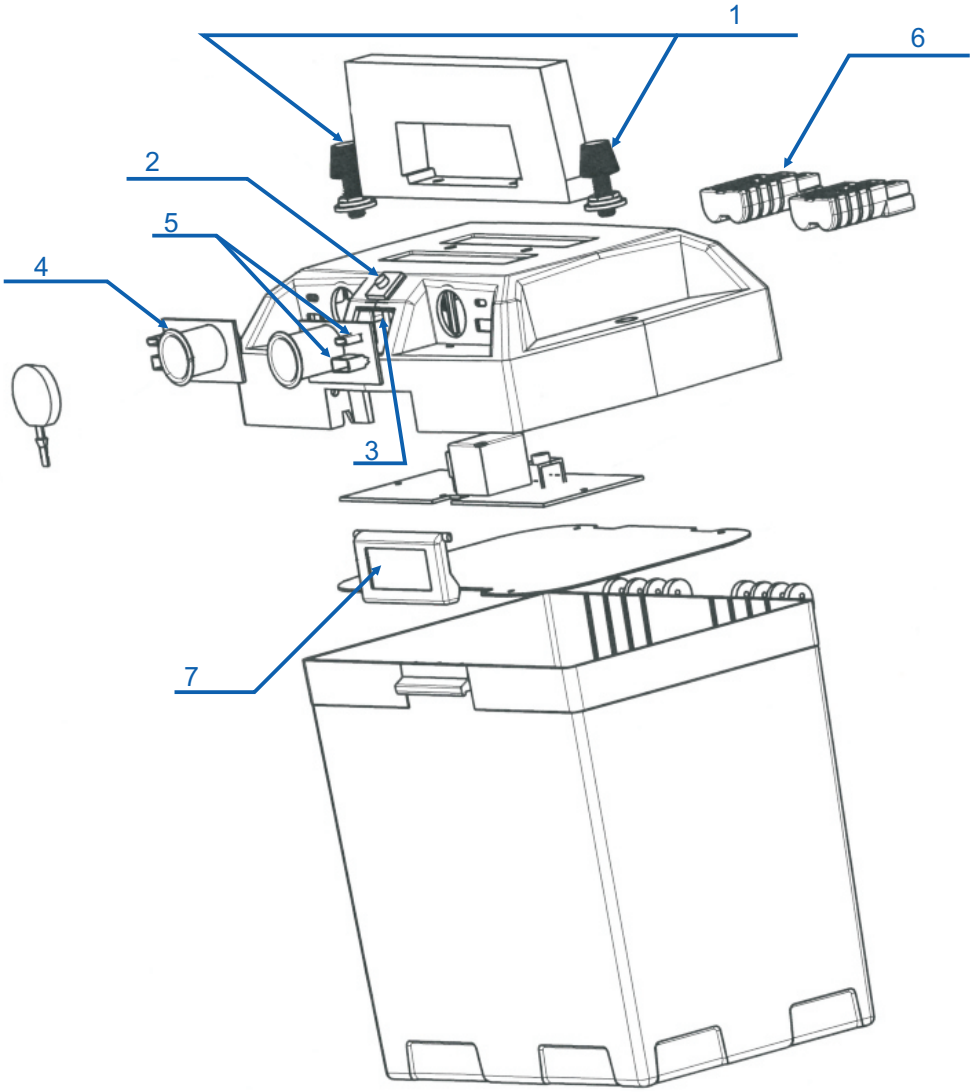

INSTALLATION INSTRUCTIONS:

Step 1: Pull the buckle and open the lid of the battery box.

Step 2: Place the battery in the battery box.

Step 3: Attach the eyelets from the battery box lid to the corresponding positive and negative terminals on the battery. Make sure connections are fastened and tight.

Step 4: Close the lid and make sure the buckle is latched.

USB PORT/ANDERSON PLUG/ CIGARETTE LIGHTER SOCKET USE:

1. Press the ON/OFF switch to check the reading of the battery power and activate the port/plug/socket.
2. Connect the device to the port/plug/socket and charging will begin.

Note: For a rechargeable battery, a solar panel can be connected to the Anderson plug to charge the battery.

MAINTENANCE:

1. Please keep the inner of the box clean and dry.
2. Please cover USB ports and cigarette lighter sockets with rubber plugs to prevent potential damage.
3. Always keep the external terminals clean.

TROUBLESHOOTING:

Problem	Cause	Solution
If the volt meter does not light up or display the battery's voltage	1.terminals may be reversely connected. 2.the battery may have run out of power. 3.the fuse may have blown.	1.Correctly reconnect positive and negative terminals. 2.Change the battery. 3.Change the fuse.
If you are not receiving power through the cigarette lighter sockets or USB ports		
If you are not receiving power through the Anderson plugs		

ATEMPOWER

WARRANTY

24 MONTH

WARRANTY PERIOD:

ATEM POWER warrants that each of our battery box that is purchased while this Warranty is in effect will be free from defective workmanship and materials for a period of 2 years.

WHAT DOES THE WARRANTY COVER?

1.Any defect in design or manufacture which results in its failure to perform correctly as described.

2.We will either repair or replace the product at our discretion provide that the fault is found to have been caused by a design or manufacturing defect and not misuse or tampering.

3.The limited warranty is the only one that applies to this unit, and it sets forth all the responsibilities of ATEM POWER.

THE WARRANTY DOES NOT COVER:

1.Cost of removing and reinstalling the product.

2.Travel and /or other expenses due to customer's location.

3.Transport charges and damage in transit. It is your responsibility to deliver and pick up your product, including any costs associated with the postage of repairing or replacing your product. If you want to send the product back we recommend that you insure against loss or damage.

4.Any loss directly or indirectly associated with damages of the product.

5.Damage caused by mould, misuse, incorrect operation, adverse weather, extreme temperature, accidents and daily wear and tear.

6.This unit is not intended for commercial use. This warranty does not apply to damage to units from misuse or incorrect installation/connection. Misuse includes wiring or connecting to improper polarity power sources and using faulty or incompatible devices.